SIGN BRACKET
for 2 1/2" Sign Posts

TOP SECTION

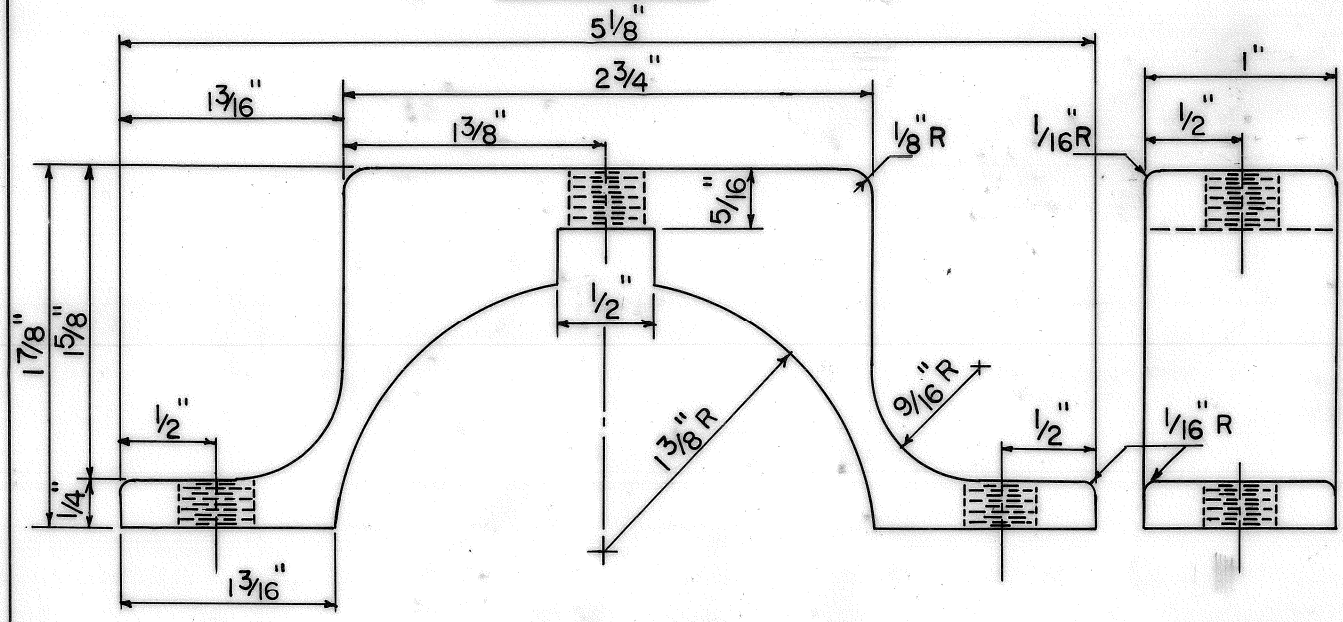

FRONT VIEW

END VIEW

BOTTOM SECTION

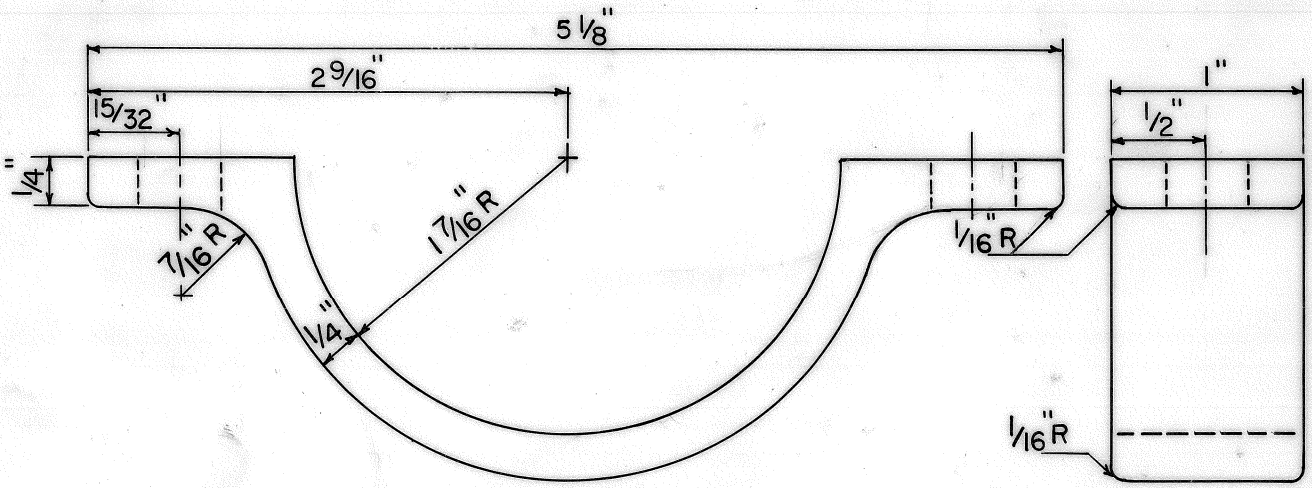

FRONT VIEW

END VIEW

NOTES:

1. TOP SECTION: Drill and Tap (3) 3/8" x 16 American Standard Coarse Thread Holes.
2. BOTTOM SECTION: Drill (2) 7/16" dia. Holes
3. MATERIAL: For Bracket to be of the following Composition: Aluminum Alloy 356T6 A.S.T.M. Spes. B-26-50TSG70A-T6

Date: Feb. 23, 1972

A216

Scale: Full Size