Date: August 1, 1979

UTILITY POLE SIGN CLAMP

NOTES:

Material for Bracket to be of the following composition: Alluminum Alloy 356T6 A.S.T.M. Specs. B-26- 50TSG70A-T6

Brackets to be furnished with the following:

1. (1) cone point socket set screws blue black 3/8" X 16 American std. coarse thread X 3/4" length.
2. (2) Stainless steel bolts 5/16" dia. X 18 American std. coarse thread X 1 1/4" length with nuts.

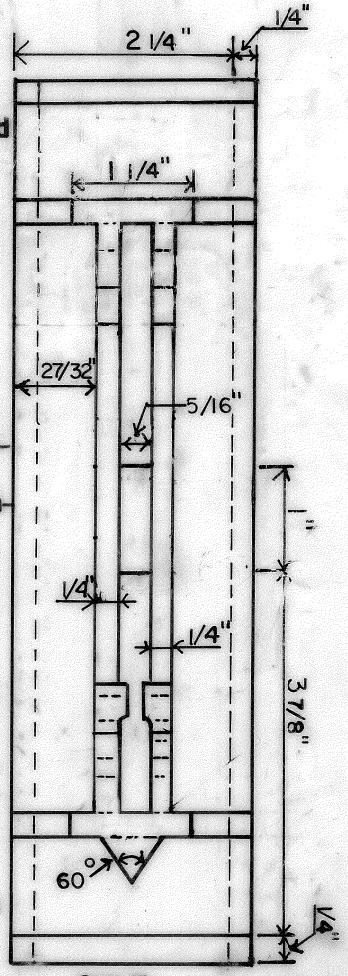

SIDE

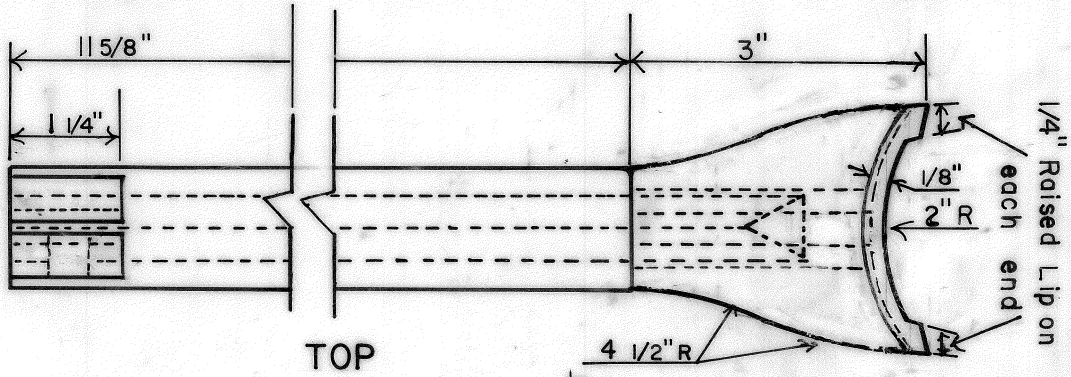

TOP

SECTION A-A

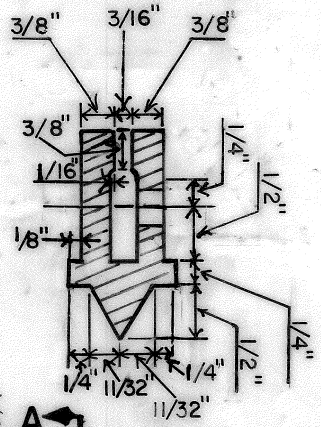

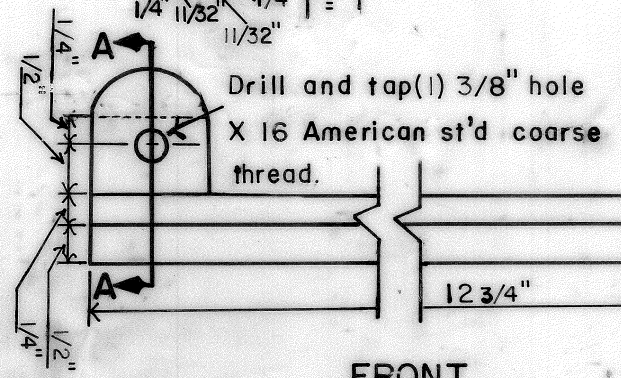

FRONT

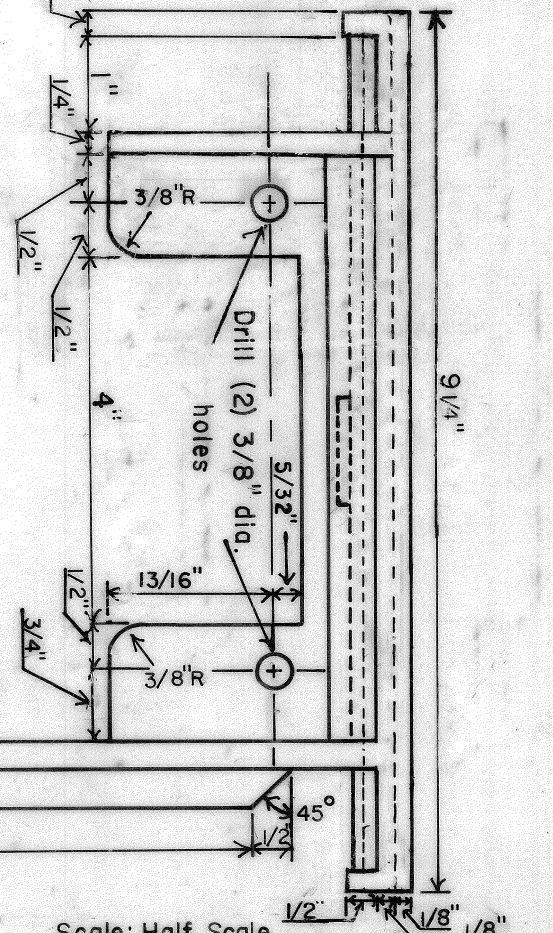

Scale: Half Scale

A212