Date: Aug. 23, 1971

8" SIGN HOLDING CAP
for Sign Posts

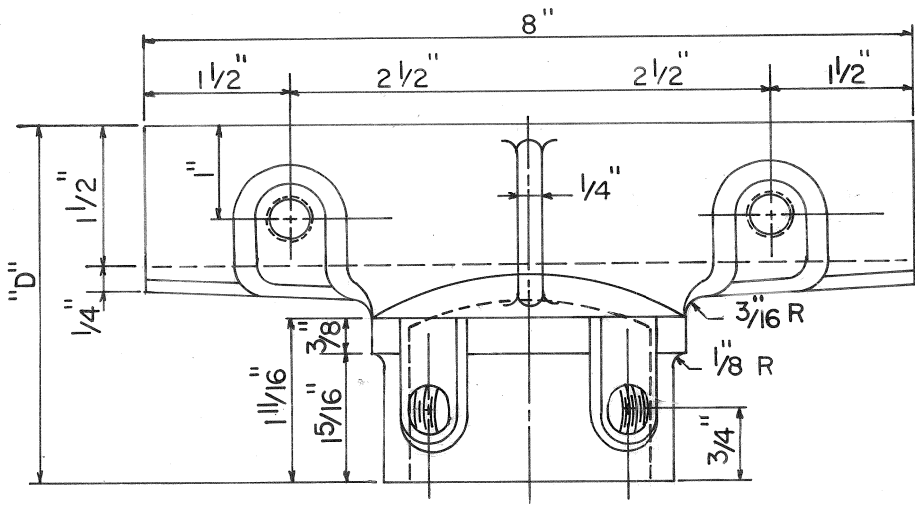

FRONT ELEVATION

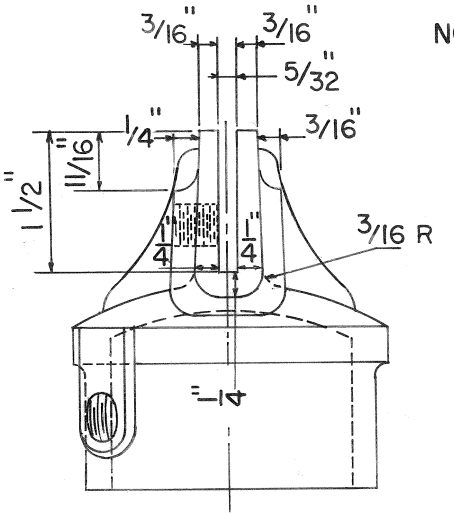

SIDE

NOTES:
Material for Cap to be of following Composition: Aluminum Alloy 356T6 A.S.T.M. Specs. B-26-50T SG70A-T6

Pipe Size	DIMENSION			
	"A"	"B"	"C"	"D"
2"	2 1/2"	3"	3 1/4"	3 3/4"
2 1/2"	3"	3 1/2"	3 3/4"	4 1/8"
3"	3 5/8"	4"	4 1/4"	4 1/4"
3 1/2"	4 1/8"	4 1/2"	4 3/4"	4 3/8"

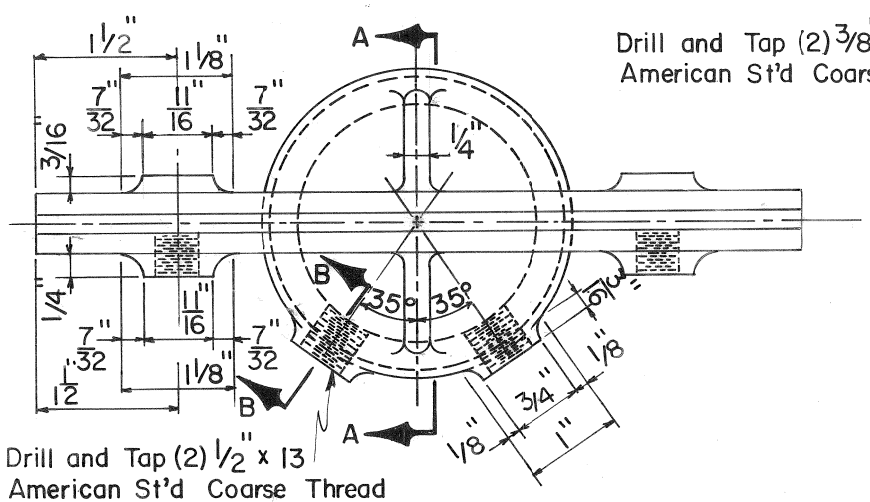

PLAN

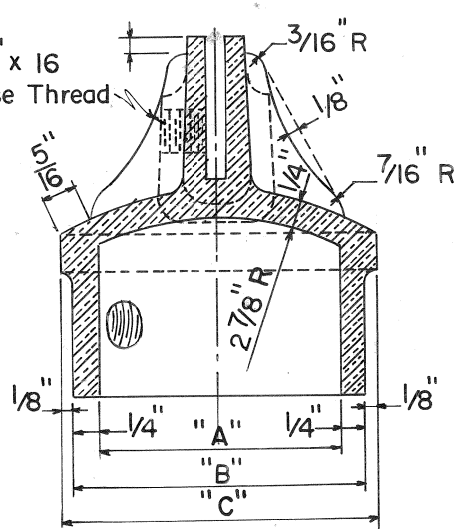

SECTION A-A

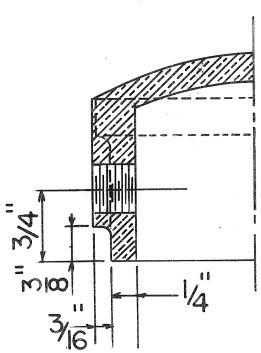

SECTION B-B

Scale: Half Size

A210