Date: Aug. 23, 1971

6" SIGN HOLDING CAP
for 2" Sign Post

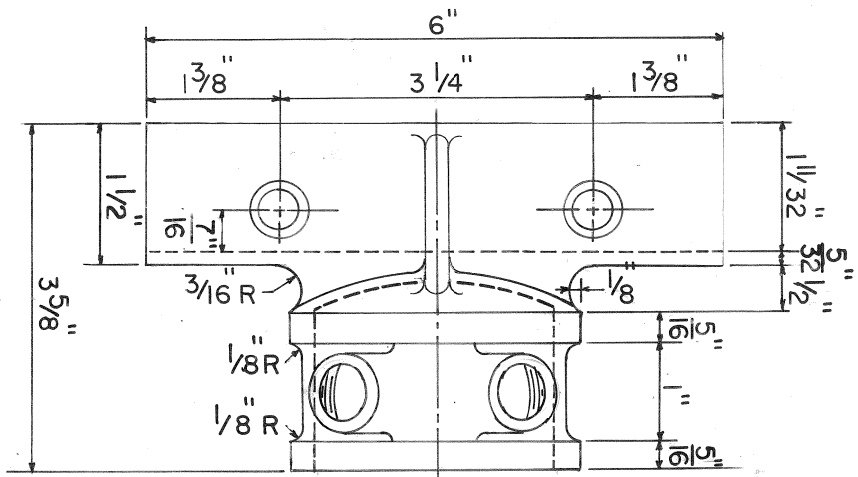

FRONT ELEVATION

NOTES:
Material for Cap to be of following Composition: Aluminum Alloy 356T6 A.S.T.M. Specs. B26-50T SG70-A-T6

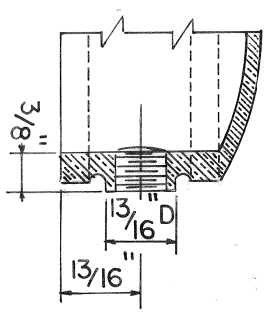

SECTION B-B

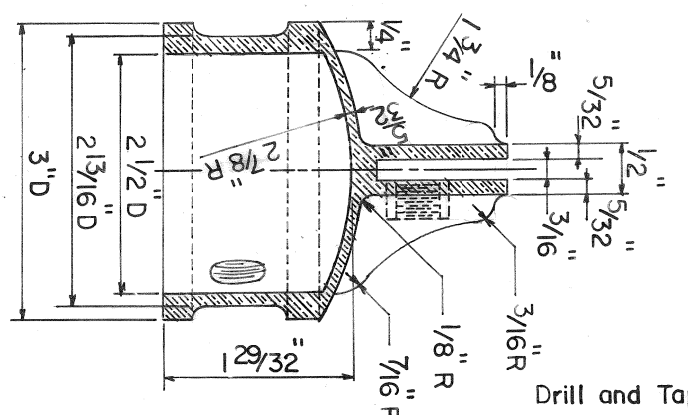

SECTION A-A

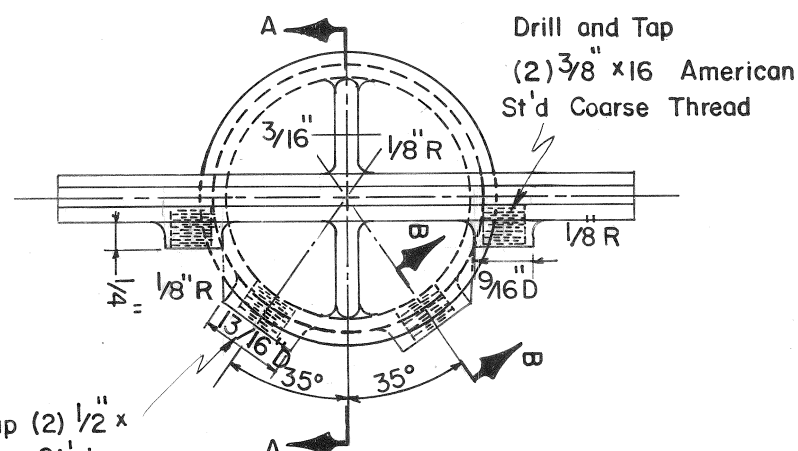

PLAN

Scale: Half Size

A209