WELDED PARKING METER POST AND FLANGE

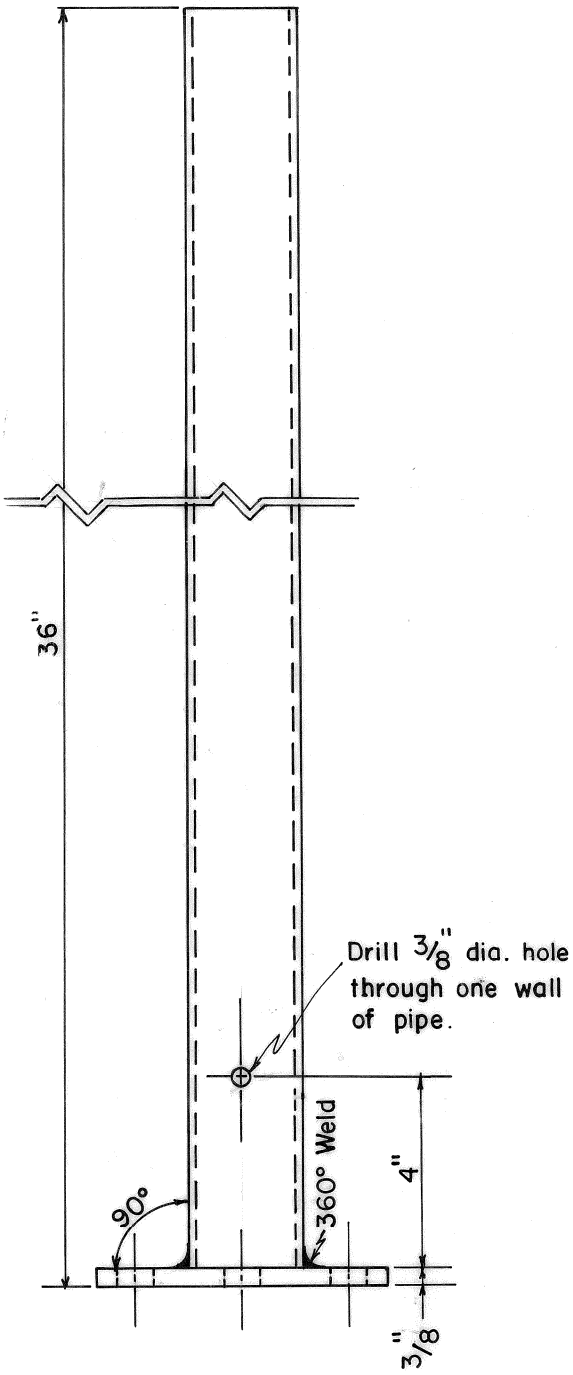

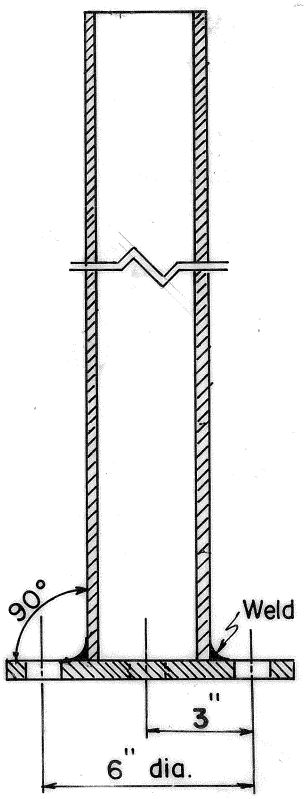

SECTION A-A

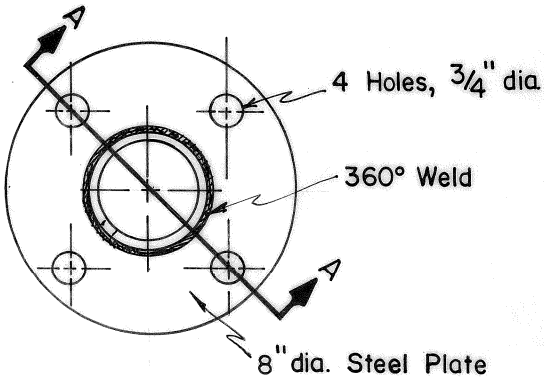

NOTES:

1. Pipe to be cut square.
2. Meter posts to be reamed inside and deburred outside on both ends.
3. After welding steel plate flange to be hot dipped galvanized.
4. Meter Posts to be 2" Schedule 40 Galvanized Pipe.

Not to Scale

A104

Date: 23, 1971 REV. NOV. 17, 1982 Rev. April 16, 1986 Rev. Feb. 2, 2001