5-15-98

HANDHOLE DETAIL FOR STEEL MASTARM TYPE II

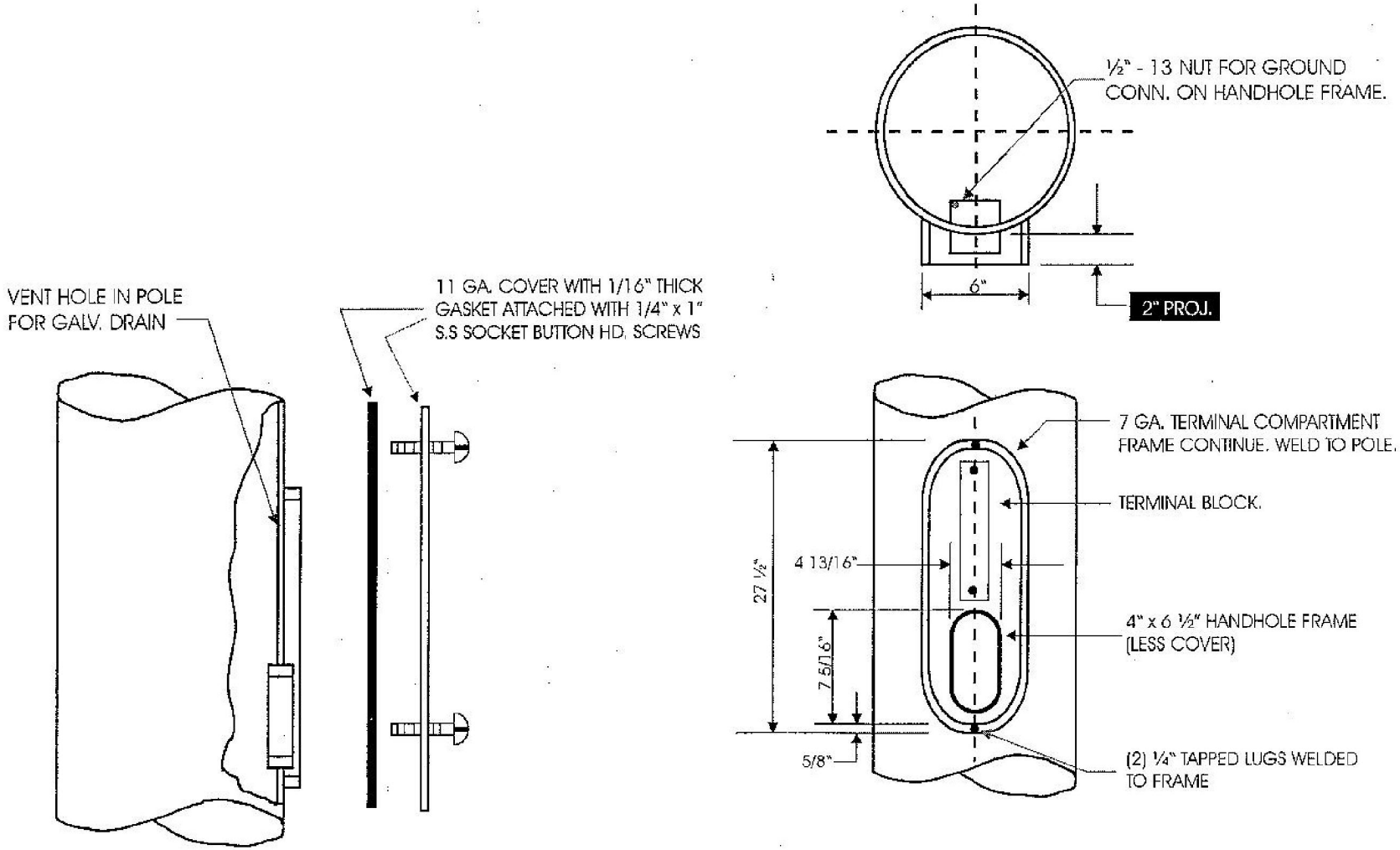

HANDHOLE DETAIL

NOT TO SCALE

A 44